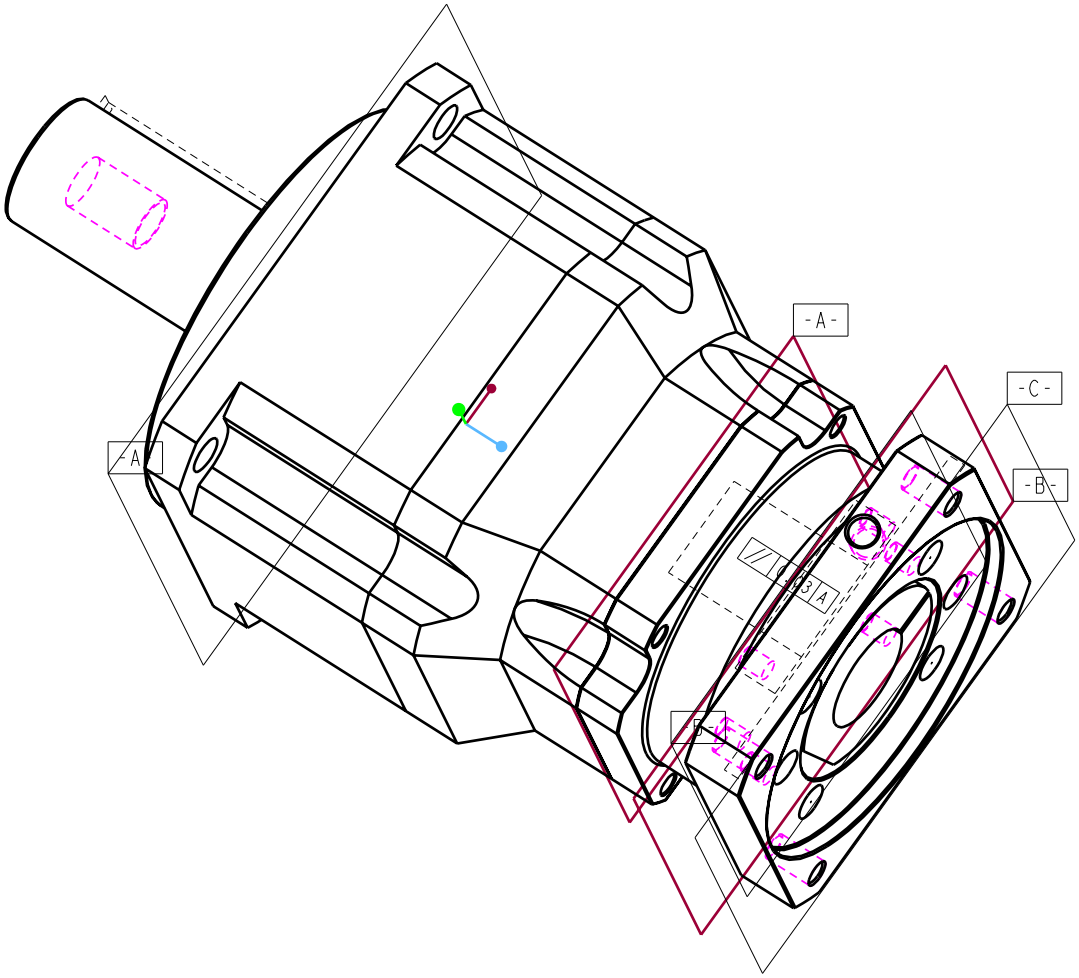
-A-
-A-
-B-
-C-
-D-
0.03 A